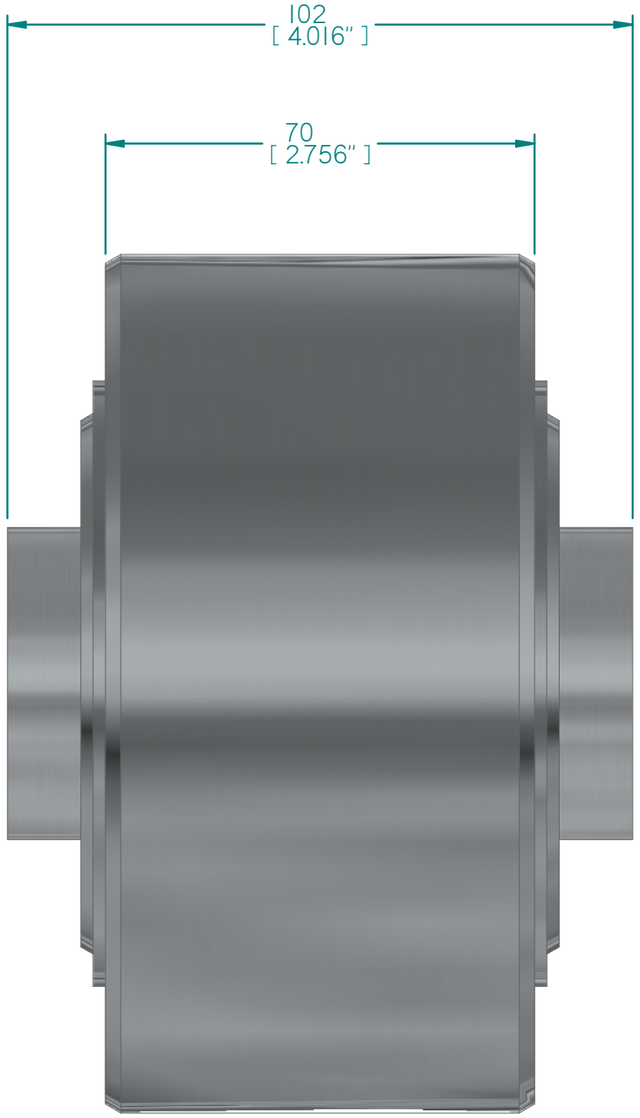

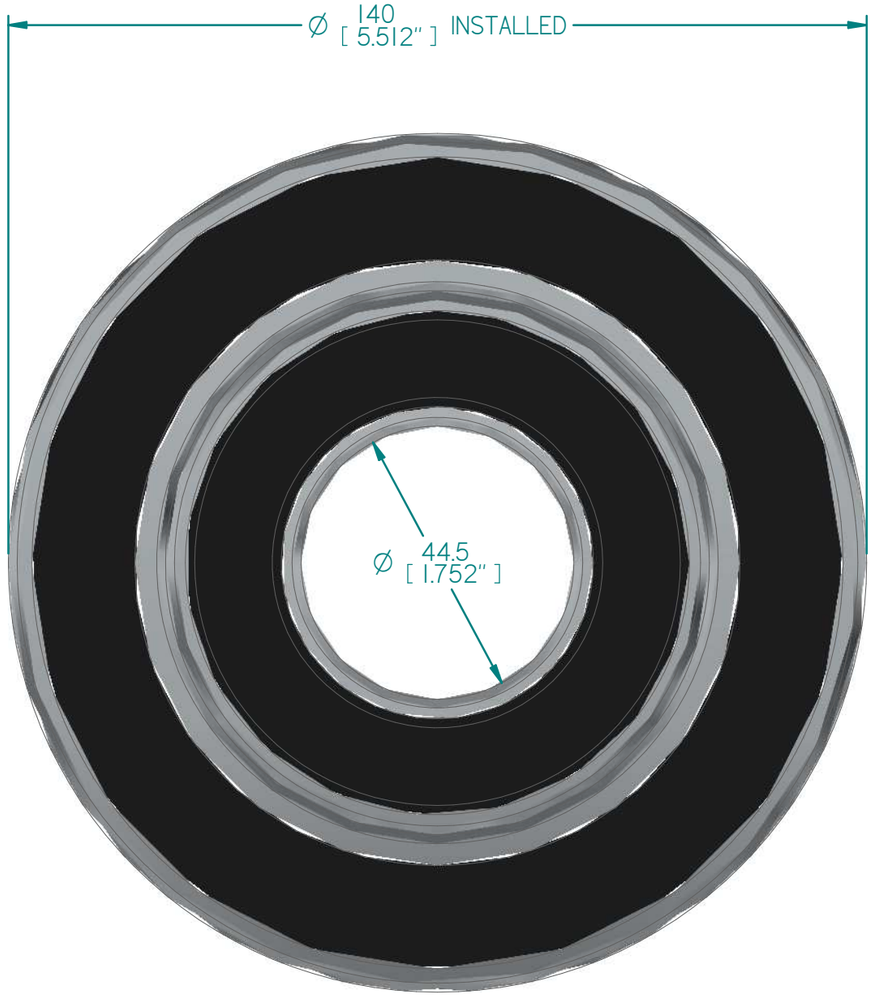

©COPYRIGHT VULCANITE PTY LTD. ALL RIGHTS RESERVED. DRAWING PROVIDED FOR INFORMATION PURPOSES ONLY. VULCANITE RESERVES THE RIGHT TO CHANGE DIMENSIONS AND/OR SPECIFICATION AT ANY TIME.

FOR SPECIFICATION REFER TO VULCANITE.COM.AU

AS 1100.201-1992	
0 - 6	±0.1
6 - 30	±0.2
30 - 120	±0.3
120 - 400	±0.5
400 - 1000	±0.8

UNLESS OTHERWISE SPECIFIED, TOLERANCE ON ALL DIMENSION OF LENGTH AND ANGLE ON RUBBER ARE TO CLASS M3 OF STANDARD ISO 3302-1: 1996 AND ON METAL ARE TO AS 1100.201-1992 AND AS1365-1986

ISO 3302-1: 1996 CLASS M3			
RANGE	SPEC	25 - 40	±0.60
0 - 6.3	±0.25	40 - 63	±0.80
6.3 - 10	±0.30	63 - 100	±1.00
10 - 16	±0.40	100 - 160	±1.30
16 - 25	±0.50	160 -	±0.8%

ELASTOMER SPEC: NATURAL RUBBER

METAL SPEC: K1045 STEEL

FINISH: RUST VETO

WEIGHT: 3.41 [7.52 lbs]

ALL DIMENSIONS ARE IN MILLIMETRES WITH INCHES SHOWN INSIDE []

NOT TO SCALE

SIZE: A3

THIRD ANGLE PROJECTION

vulcanite
Excellence in engineered rubber solutions.

CERTIFIED QUALITY MANAGEMENT SYSTEM ISO 9001

VULCANITE PTY LTD
ABN: 62 000 055 089

TITLE: 140mm O.D. CYLINDRICAL BUSH

SUB-TITLE:

DWG No: VP2500